JIVE
Joint Institute for VLBI
ERIC

Heterodyning and synchronisation for mm/sub-mm SVLBI

Paul Boven, JIVE

2022-10-19

Introduction

- Paul Boven <boven@jive.eu>
- JIVE Networking Systems Engineer
- 2014 - 2018: SKA SADT Consortium
  - Synchronization and Timing Architect
  - WP lead PPS distribution
- 2015 - 2019: Asterics Project
  - VLBI capable clock distribution to Dwingeloo Radio Telescope
- Contributed to THEZA Heterodyning and Synchronisation chapter

Clock Characterization: Allan Deviation (phase stability)

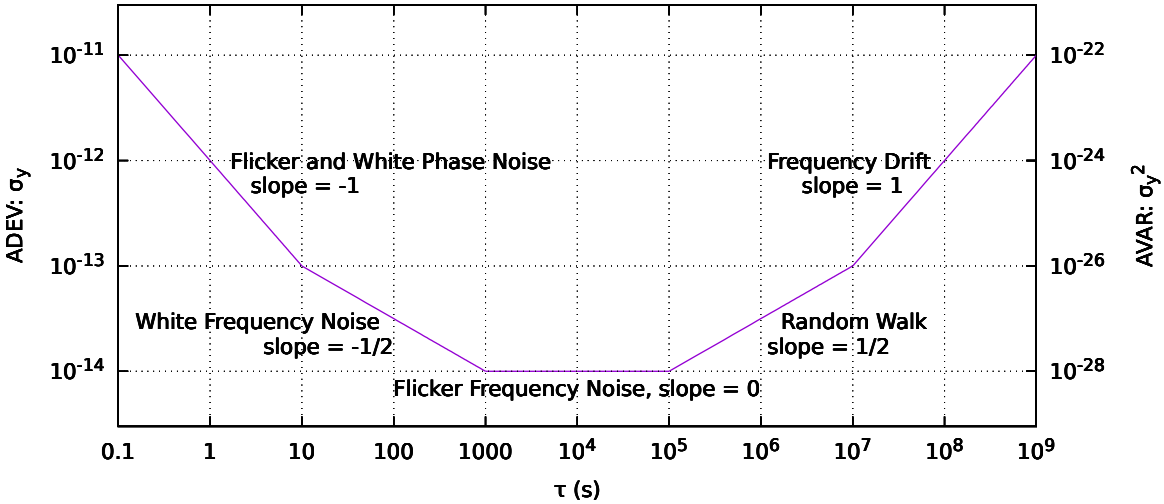

Coherence and Coherence Loss

Given a perfect sinusoid, and one with phase noise $\varphi(t)$,

$$V_a(t) = V_0 \cos 2\pi\nu_0 t \qquad V_b(t) = V_0 \cos(2\pi\nu_0 t + \varphi(t))$$

The coherence C over an integration time T due to phase error $\varphi(t)$

$$C(T) = \left| \frac{1}{T} \int_0^T e^{i\varphi(t)} \mathrm{d}t \right|$$

Coherence Loss

$$L_C(T) = 1 - \sqrt{\langle C^2(T) \rangle}$$

Coherence loss results in reduced sensitivity
SKA1 design limit: $< 2\%$ coherence loss (clock distrubition)

B. Alachkar e.a., Frequency Reference Stability and Coherence Loss in Radio Astronomy Interferometer Applications for the SKA
Journal of Astronomical Instrumentation, DOI 10.1142/S2251171718500010

H-maser (1977)

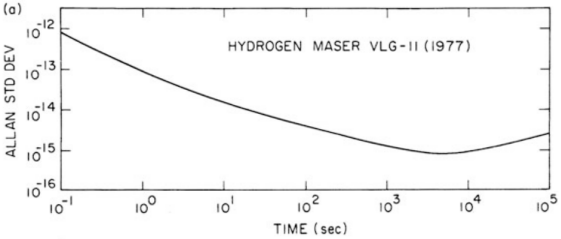

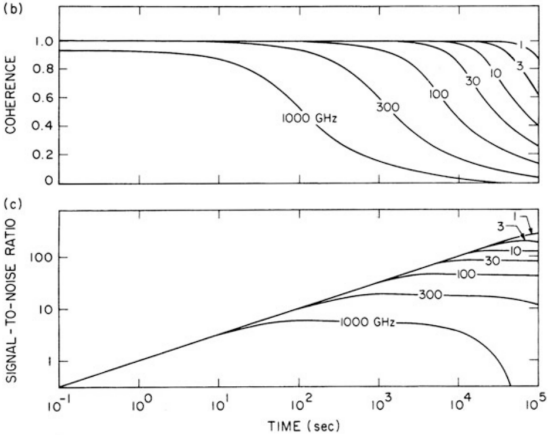

- Two H-masers (1977 vintage)
- Coherence as function of ν_0
- Assuming perfect atmosphere

- With modern H-masers:
- Upper end of the THEZA band (1.2 THz)
- $> 50\%$ coherence loss for $\tau > 100\,\mathrm{s}$.

Graphs: Thomson, Moran, Swenson, Interferometry and Synthesis in Radio Astronomy, 3rd ed

Calculating Coherence

Assuming stationarity, Gaussian phase noise: Express clock behaviour as Allan Variance $\sigma_y^2(\tau)$

$$\langle C^2(T)\rangle = \frac{2}{T}\int_0^T \left(1-\frac{\tau}{T}\right) e^{-(\pi\nu_0\tau)^2[\sigma_y^2(\tau)+\sigma_y^2(2\tau)+\sigma_y^2(4\tau)+\cdots]}\mathrm{d}\tau$$

Analytic solutions for two cases:

- White Phase Noise: ADEV slope $= -1$ (AVAR slope $= -2$)

$$\lim_{k\to\infty}\sum_{n=0}^{k}\left(\frac{1}{4}\right)^{-n} = \frac{4}{3} \qquad \Rightarrow \qquad L_C = 1-\sqrt{e^{-h_2 f_h \nu_0^2}}, \quad \sigma_y^2(\tau) = \frac{3h_2 f_h}{(2\pi)^2\tau^2}$$

- White Frequency Noise: ADEV slope $= -\frac{1}{2}$ (AVAR slope $= -1$)

$$\lim_{k\to\infty}\sum_{n=0}^{k}\left(\frac{1}{2}\right)^{-n} = 2 \qquad \Rightarrow \qquad L_C(T) = 1-\sqrt{\frac{2(e^{-aT}+aT-1)}{a^2T^2}}, \quad a = \pi^2\nu_0^2 h_0$$

Optical Frequency Transfer Links

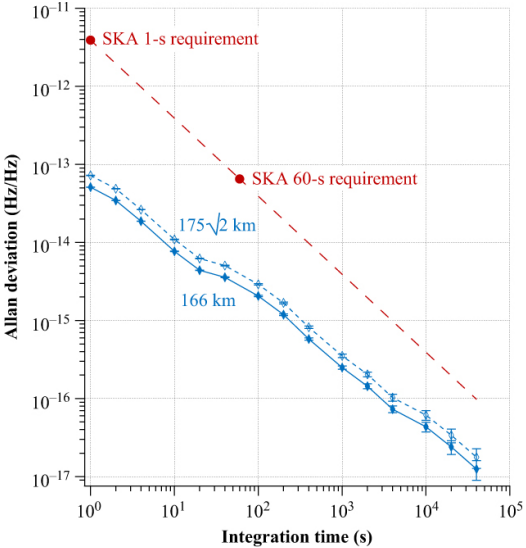

- Feedback Loops have an ADEV slope of -1
- If there are no phase slips
- White Phase Noise behaviour
- Predictable Coherence

- SKA1-Mid Frequency Transfer Design
- Tested over 166 km of (metropolitan) fiber
- Extrapolated to two independent links, 175 km apart

- Design by Sascha Schediwy e.a, UWA

The mid-frequency Square Kilometre Array phase synchronisation system,

S. W. Schediwy e.a., PASA Feb. 2019

SKA1-Mid Frequency Transfer Design

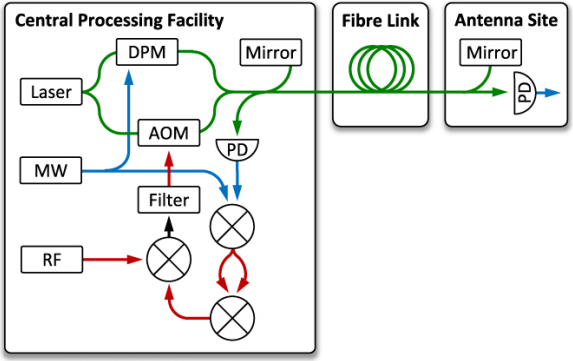

- Return trip measurement
- Mach-Zehnder Interferometer
- Phase compensation (infinite servo range)
- Two wavelengths, 8 GHz apart
- Far end Mirror with AOM, to shift return signal
- Fiberized, COTS components

Free Space Optical Links

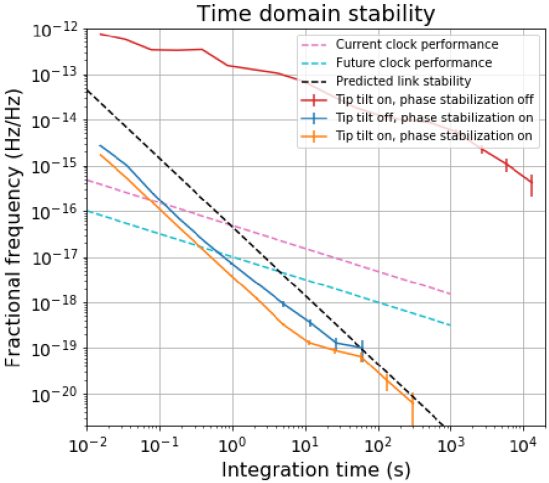

- FS coherent optical link, 192 THz
- Tip/Tilt Servo + Quadrant Photo Detector
- 2.4 km horizontal link
- Turbulence comparable to reach LEO
- Original goal: comparing optical atomic clocks via optical satellite links
- Note: graph shows MDEV, not ADEV
- White Phase Noise Behaviour
- ADEV much lower than H-maser

D. Gozzard e.a., Ultra-stable Free-Space Laser Links for a Global Network of Optical Atomic Clocks

Conclusions

- Optical Free-Space Reference Distribution seems feasible
- Likely to outperform in-orbit H-masers (and CSOs)
- Can also provide very accurate doppler and delay
- Optical FS links can support the high data rates needed for SVLBI

- Could THEZA work on only optical links?